OTK KART JAPAN

MINI ROK JAPAN

Technical Regulations

Updated 24 Nov 2026 | MINI ROK (FS-Mini *JAF category) | Vortex MINI ROK 60cc

Any matters not specified in these Technical Regulations shall be governed by the JAF National Karting Vehicle Regulations and the CIK-FIA Regulations, including any subsequent amendments and additions, which apply in full to this document.

All dimensions and shapes of the engine, carburettor and related parts **shall comply with the National Specification Sheet.**

This is an English translation. In the event of any discrepancy, the Japanese version shall prevail.

QUICK REFERENCE

Minimum mass **110kg**	Tyres dry / wet **VEGA M1 / WM1**	Carburettor **Tillotson HW-48A**	Spark plug **NGK BPR9EIX**
Engine oil / mixture ratio **ENI KART 2T / 25:1**	Combustion chamber (min.) **6.8cm³**	Squish (sum of 2 points) **1.6mm min.**	Clutch grip / direct drive **3500 / 4500rpm**

01 Category

MINI ROK (FS-Mini *JAF category)

02 Chassis

2.1 Chassis must be **homologated by the CIK-FIA in Group 3**. However, a chassis may continue to be used for a further 3 years after its CIK-FIA homologation has expired.

2.2 All homologated components (brake system, bodywork, rear wheel protection) must have a CIK-FIA homologation. However, they may continue to be used for a further 3 years after their CIK-FIA homologation has expired.

2.3 A front fairing mounting kit complying with “CIK-FIA TECHNICAL DRAWING No. 3.2” is mandatory.

2.4 Maximum overall width: **1,100mm**

2.5 The position of the bodywork and the tyres must comply with “CIK-FIA TECHNICAL DRAWING No. 3.1A”. (See Appendix)

03 Engine

3.1 **Vortex MINI ROK 60cc engine** officially imported into Japan, compliant with the current MINI ROK National Specification Sheet
(Engine No. [J○○○○]: must be **5 characters beginning with "J"**)

3.2 FORBIDDEN Any machining, joining, polishing, addition or removal of material is forbidden.

3.3 The dimensions of all parts shall comply with the MINI ROK National Specification Sheet.

04 Carburettor

4.1 **Tillotson "HW-48A"** (with ROK mark)

4.2 The carburettor must be mounted in the orientation shown in the figure on the right.

4.3 The original construction must be maintained. Fitted parts and their use are limited to those listed in the National Specification Sheet.

4.4 FORBIDDEN Any machining, joining, polishing, addition or removal of material is forbidden.

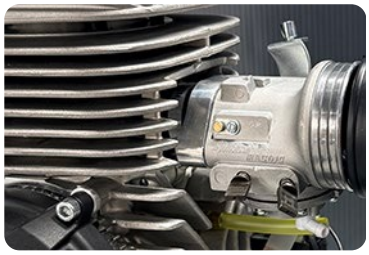

Carburettor mounting orientation

05 Clutch

5.1 Perforated clutch drums must be fitted with a cover in accordance with the National Specification Sheet.

5.2 FORBIDDEN Any machining, joining, polishing, addition or removal of material on the clutch shoes, clutch drum or other parts is forbidden.

5.3 FORBIDDEN Any substance containing lubricant is forbidden on the clutch, both inside and outside. (Take care with chain oil.)

5.4 The following checks may be carried out with the driver seated in the kart:

- The clutch must start to grip at **3500rpm**.
- Under all conditions, the clutch must be in 100% direct drive at a minimum of **4500rpm**.

06 Ignition

SELETTRA ignition as specified in the National Specification Sheet.

07 Gear Ratio

7.1 Only **"219 type"** chain may be used.

7.2 The permitted sprocket size may be specified for each event. In such cases, participants will be notified by official bulletin or similar.

08 Spark Plug

8.1 **"NGK BPR9EIX"** as specified in the National Specification Sheet.

8.2 FORBIDDEN Any machining, joining, polishing, addition or removal of material is forbidden.

09 Engine Oil

9.1 **"ENI KART 2T"** as specified in the National Specification Sheet.

9.2 FORBIDDEN Mixing anything other than the lubricant specified in 9.1, such as other oils or additives, into the fuel is forbidden.

9.3 The engine oil mixture ratio shall be **25:1**.

10 Intake Silencer

10.1 **Genuine VORTEX part** (with mark) as specified in the National Specification Sheet.

10.2 A rain cover may be used **only when wet tyres are fitted**, and only the genuine VORTEX part specified in the National Specification Sheet.

10.3 Use of the mesh cap supplied with the air intake tube is **free**.

10.4 FORBIDDEN Any machining, joining, polishing, addition or removal of material is forbidden.

11 Exhaust

11.1 **Genuine VORTEX part** (with mark) as specified in the National Specification Sheet.

11.2 FORBIDDEN Any machining, joining, polishing, addition or removal of material is forbidden.

12 Minimum Mass

110 kg

13 Tyres

DRY
VEGA M1
(CIK MINI)

WET
VEGA WM1
(CIK MINI RAIN)

14 Scrutineering

14.1 Scrutineering shall take into account the provisions of these Technical Regulations, the National Specification Sheet issued by OTK Kart Japan together with these regulations, and the Sporting Regulations of the relevant race series. Tolerances stated in the National Specification Sheet are manufacturing tolerances.

14.2 The sealing of the exhaust manifold and inlet gasket must not be reduced, restricted or obstructed in any way.

15 Combustion Chamber Volume

15.1 Minimum combustion chamber volume: **6.8cm³** (4.8cm³ + insert 2cm³)

15.2 Measurement procedure

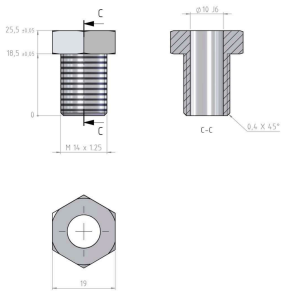

Plug insert dimensions

1. Remove the engine from the chassis.
2. Wait until the engine is at ambient temperature (the organiser must provide suitable cooling fans).
3. Remove the cylinder head to control the protrusion of the spark plug into the combustion chamber.
4. Remove the spark plug (check the 18.5 mm dimension).
5. Screw the plug insert in place of the spark plug (the plug insert, tightened on the cylinder head, must not protrude beyond the upper part of the combustion chamber; it must be fixed to the cylinder head in exactly the same way as the 18.5 mm spark plug).
6. Using grease, make the piston crown and the periphery of the cylinder watertight (airtight).
7. Place the piston at top dead centre and block the crankshaft.
8. Carefully remove any excess grease.
9. Check that the engine is level.
10. Refit the cylinder head and tighten it to the torque recommended by the manufacturer.
11. With a laboratory graduated burette (mechanical type A or electronic), fill the combustion chamber with **“CASTROL ATF DEXRON” VI (6) “RED” type OIL** ensuring that it reaches the very top of the upper edge of the plug insert.

16 Port Timing Measuring Tool

The exhaust port opening angle, inlet port opening angle, transfer port opening angle, and the angle between the exhaust and inlet ports must be measured using an **opening angle wedge, 5mm wide and 0.20mm thick** (see figure below).

The reading is carried out using a digital display with the measuring device operated by an encoder, or a **graduated disc with a minimum diameter of 200mm**.

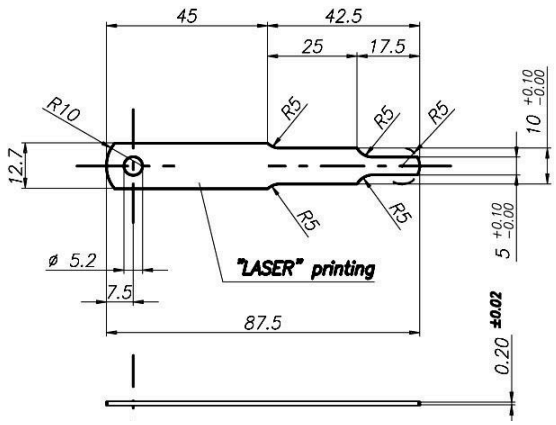

Opening angle wedge (5mm wide / 0.20mm thick)

17 Inlet Port Opening Timing (Admission Gap) Check

1

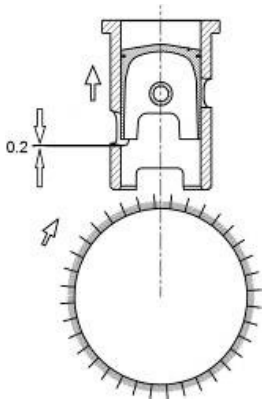

Turn clockwise to raise the piston so that the thickness gauge can be inserted against the lower edge of the inlet port.

2

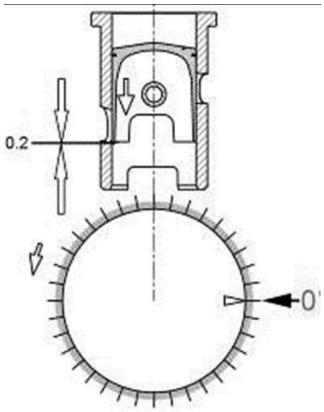

Turn anticlockwise to lower the piston until it touches the thickness gauge placed against the inlet port edge. At this point, set the scale to **0°**.

3

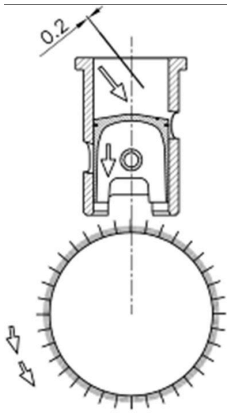

Remove the thickness gauge and turn anticlockwise to lower the piston so that the thickness gauge can be inserted below the upper edge of the exhaust port.

4

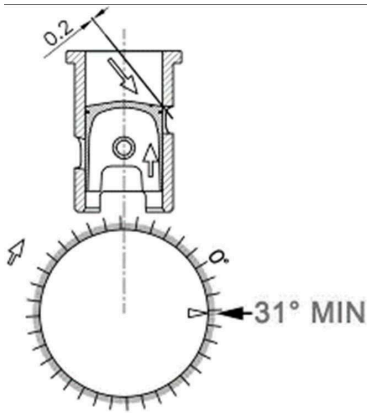

Turn clockwise to raise the piston until it touches the thickness gauge placed against the exhaust port edge. At this point, check that the vernier travel reading is **31° or more** (the vernier travel must not be less than 31°).

18 Squish Clearance Measurement

18.1 Squish height must be measured using **round solder 1.6mm in diameter**.

18.2 Measure at 2 points: the squish area on both the drive side and the ignition side.

18.3 The sum of the 2 measurements must be **1.6mm or more**.

+ References

MINI ROK National Specification Sheet
otkjapan.jp/wp/wp-content/uploads/2026/09/SpecSheet-ROK-MINI-2026-for-JAPAN.pdf

FIA KARTING TECHNICAL DRAWING No.3.2
fiakarting.com/sites/default/files/2026-01/TD%203.2.pdf

FIA KARTING TECHNICAL DRAWING No.3.1A
fiakarting.com/sites/default/files/2024-01/TD%203.1a%20-%20Bodywork%20Group%203.pdf

A FIA KARTING TECHNICAL DRAWING No.3.2

FRONT FAIRING MOUNTING KIT

DESSINS TECHNIQUES
TECHNICAL DRAWINGS

DESSIN TECHNIQUE N°3.2

Kit de montage de carénage avant - Groupe 3

TECHNICAL DRAWING No. 3.2

Front fairing mounting kit - Group 3

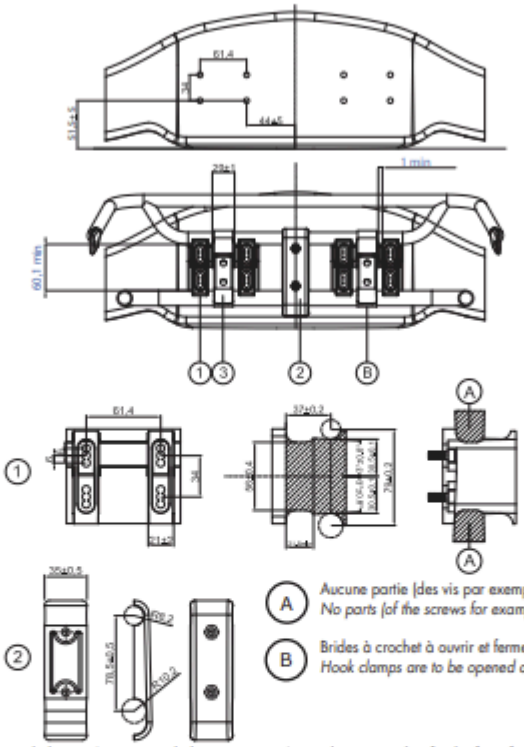

A — Aucune partie (des vis par exemple) n'est admise dans cette zone.
No parts (of the screws for example) are admitted in this area.

B — Brides à crochet à ouvrir et fermer à la main uniquement sans aucun outil
Hook clamps are to be opened and closed by hand only without any tools.

Il n'est permis de fixer le carénage avant sur le kart qu'au moyen du kit de montage de carénage avant. Aucun autre dispositif n'est autorisé. Le carénage avant doit pouvoir reculer librement en direction du châssis sans aucune obstruction d'une partie quelconque pouvant limiter le mouvement.

Les pare-chocs avant (tubes inférieur et supérieur) doivent être rigidement fixés au châssis et présenter une surface lisse. Toute intervention mécanique ou autre destinée à augmenter la friction des pare-chocs avant est strictement interdite.

Ces deux éléments doivent être alignés verticalement et être perpendiculaires au plancher / aux tubes principaux du châssis, comme indiqué sur ce Dessin Technique.

Dans tous les cas, un espace de 27 mm minimum doit être prévu en tous points entre les pare-chocs avant (tubes inférieur et supérieur) et le carénage avant.

Définition «Kit de montage de carénage avant»

1. Kit de support de montage pour carénage avant (2 pièces + 8 vis au total).
2. Support de pare-chocs avant (2 demi-coques + 2 vis au total).
3. Brides à crochet réglables (les 2 pièces doivent être fabriquées en métal).

Le logo de la CIK et le numéro d'homologation doivent être estampillés sur chaque pièce.

1. Kit de support de montage pour carénage avant (les 2 pièces doivent être fabriquées en plastique).
2. Support de pare-chocs avant (les 2 demi-coques doivent être fabriquées en plastique).

It is only permitted to fix the front fairing onto the kart using the front fairing mounting kit. No other device is authorised. It must be possible for the front fairing to move freely back in the direction of the chassis without any obstruction from any part that may restrict movement.

The front bumpers (lower and upper tube) must be rigidly connected with the chassis and must have a smooth surface. Any mechanical work or other intervention to maximize the friction of the front bumpers is strictly forbidden.

These two elements must be vertically aligned and at a right angle to the floor tray/main chassis tubes, as indicated on this Technical Drawing.

There must be a clearance at all points between the front bumpers (lower and upper tube) and the front fairing of a minimum of 27 mm at all times.

Definition «Front fairing mounting kit»

1. Mounting bracket kit for front fairing (2 pieces + 8 screws in total).

2. Front bumper support (2 half shells + 2 screws in total).
3. Adjustable hook clamps (the 2 pieces, shall be made of metal).

CIK Logo & Homologation number shall be embossed on each piece

1. Mounting bracket kit for front fairing (the 2 pieces shall be made of plastic).
2. Front bumper support (the 2 half shells shall be made of plastic).

B FIA KARTING TECHNICAL DRAWING No.3.1A

DESSINS TECHNIQUES
TECHNICAL DRAWINGS

DESSIN TECHNIQUE N°3.1a

Carrosserie - Groupe 3

TECHNICAL DRAWING No. 3.1a

Bodywork - Group 3

